SPECIFICATIONS

PISTON AREA: 19.6 IN^2 (126.5 CM^2)

ROD DIAMETER: 3.75 IN (95.3 CM)

DYNAMIC STROKE: 12.0 IN (304.8 CM)

STATIC STROKE: 12.4 IN (31.50)

STATIC FORCE RATING: 55,000 LB
AT 2800 PSI (207 BAR)

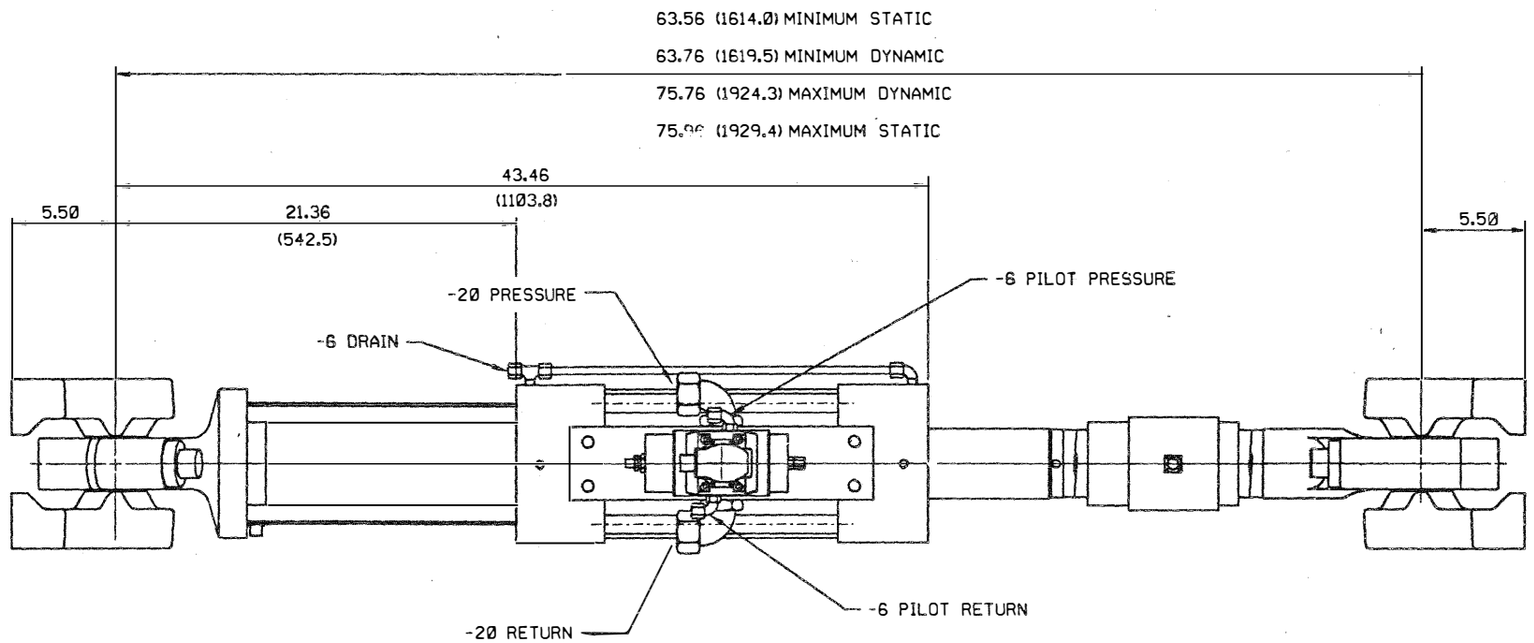

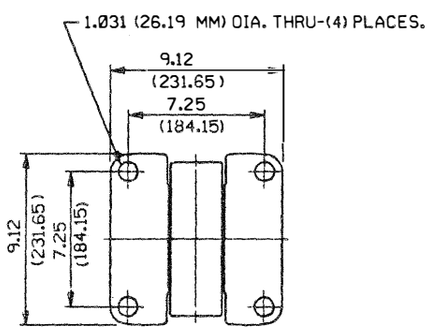

SWIVEL MOUNTING

(TYP. BOTH ENDS)

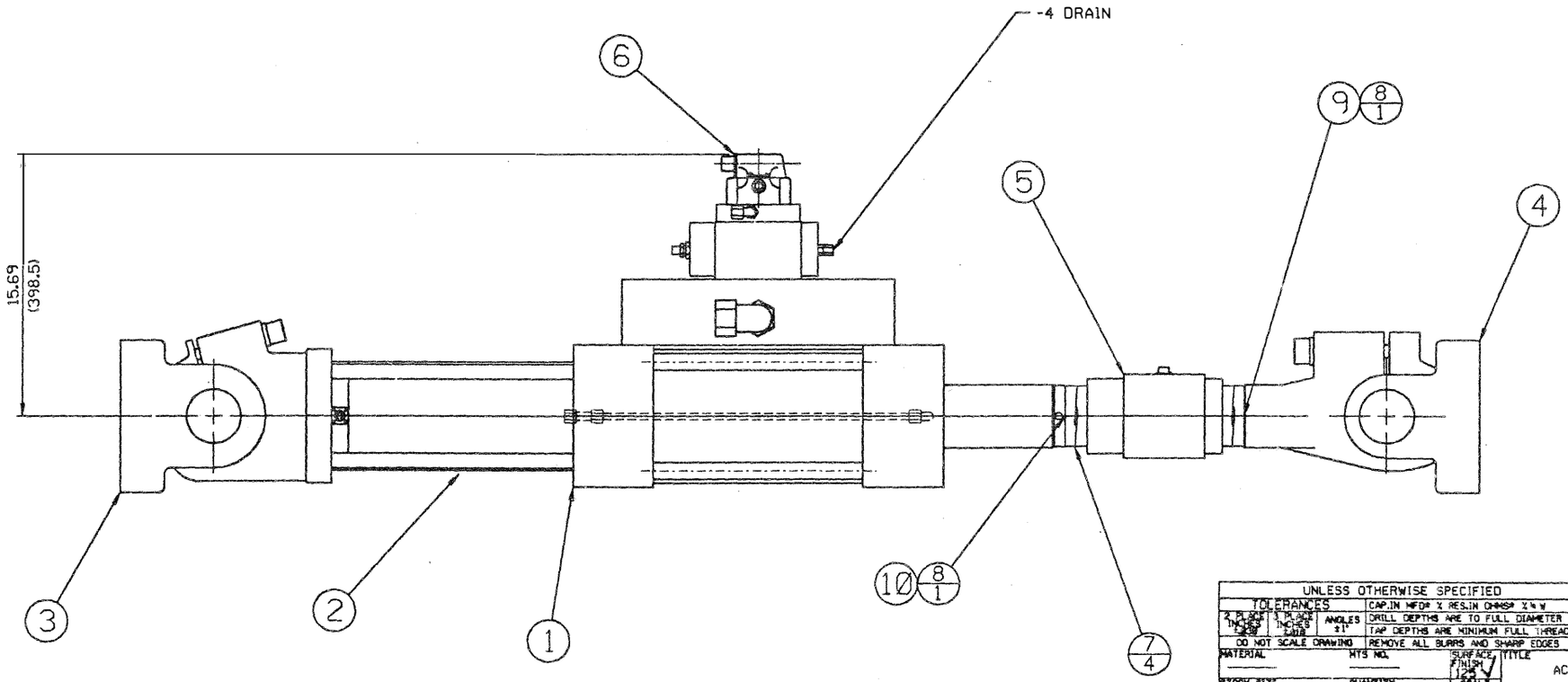

NOTES:

1. DIMENSIONS IN PARENTHESIS ARE IN MILLIMETERS UNLESS OTHERWISE NOTED.
2. SWIVEL BASE AND HEAD ASSY'S. MAY BE ROTATED 90° FROM POSITIONS SHOWN.

REVISIONS

DESCRIPTION			LETTER	ECO NO.
DFTSMN	APPVL	DATE		

UNLESS OTHERWISE SPECIFIED

TOLERANCES: 2 PLACE ±.030 INCHES; 3 PLACE ±.010 INCHES; ANGLES ±1°; DO NOT SCALE DRAWING

CAP.IN MFD± % RES.IN OHMS± %% W; DRILL DEPTHS ARE TO FULL DIAMETER; TAP DEPTHS ARE MINIMUM FULL THREADS; REMOVE ALL BURRS AND SHARP EDGES

	DFTSMN	CHECK	ENGR	MFG
	RWR		MC	
DATE	3-89	DATE	DATE 3/89	DATE

MATERIAL | MTS NO. | SURFACE FINISH 125 | TITLE: ACTUATOR ASSY-244.31, 12" STROKE

STOCK SIZE | QUANTITY | SCALE 1/4

FINISH | THIRD ANGLE PROJ. | FIRST USED ON

MTS SYSTEMS CORPORATION, MINNEAPOLIS, MINNESOTA 55424 U.S.A.

MODEL/SYSTEM NO. 948.76-20

SIZE	NUMBER	REV
D	453127-01	A

V CARD | X | SHEET 1 OF 1

REFERENCE DRAWINGS

APPROVAL